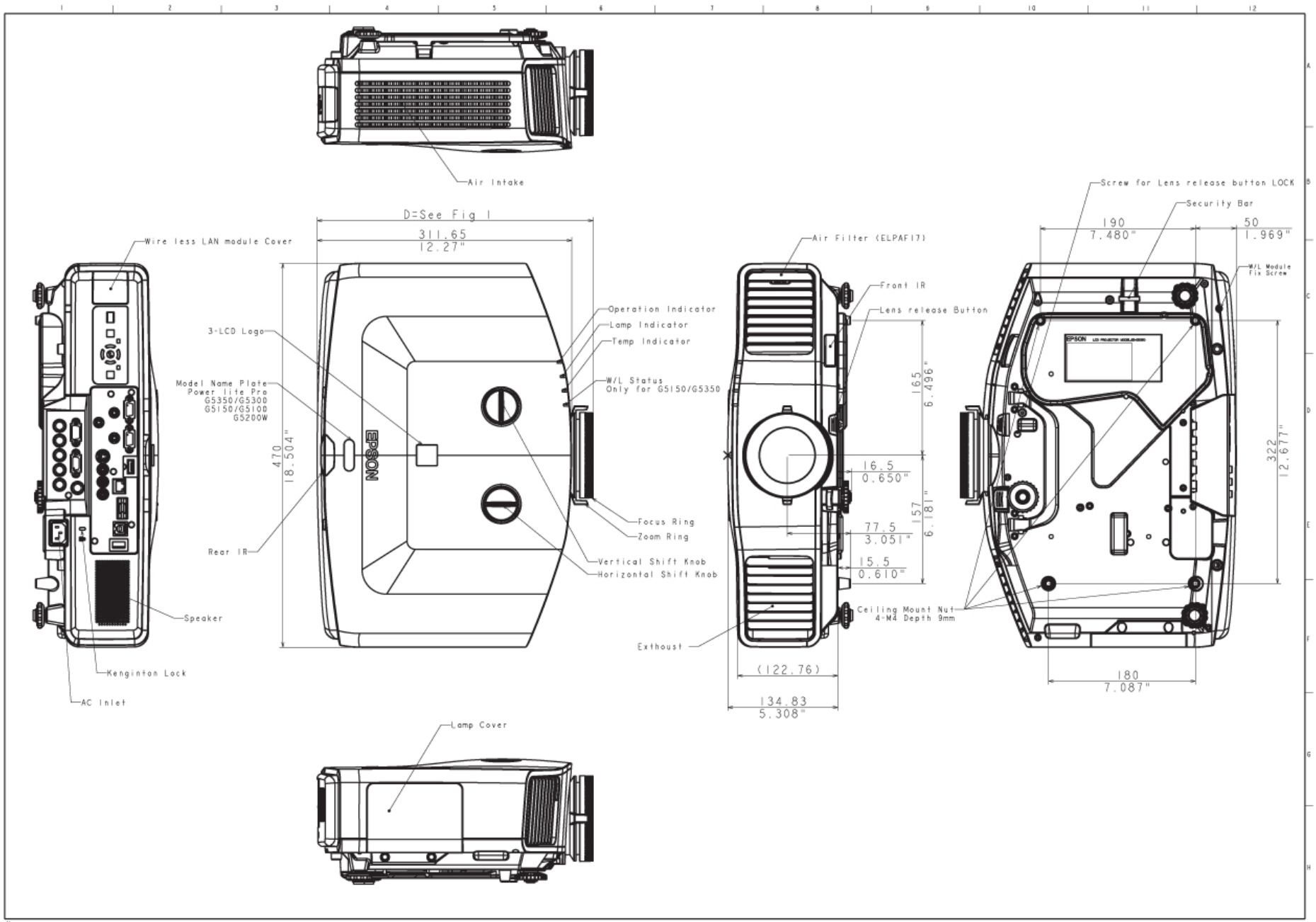
Air Intake
D=See Fig 1
311.65
12.27"
Wire less LAN module Cover
3-LCD Logo
Model Name Plate
Power lite Pro
G5350/G5300
G5150/G5100
G5200W
470
18.504"
Rear IR
Speaker
Kenginton Lock
AC Inlet
Operation Indicator
Lamp Indicator
Temp Indicator
W/L Status
Only for G5150/G5350
Focus Ring
Zoom Ring
Vertical Shift Knob
Horizontal Shift Knob
Lamp Cover
Air Filter (ELPAF17)
Front IR
Lens release Button
165
6.496"
16.5
0.650"
157
6.181"
77.5
3.051"
15.5
0.610"
Exthoust
(122.76)
134.83
5.308"
Screw for Lens release button LOCK
Security Bar
190
7.480"
50
1.969"
W/L Module
Fix Screw
322
12.677"
Ceiling Mount Nut
4-M4 Depth 9mm
180
7.087"